NOTES:
1. HARDWARE IS NOT SUPPLIED

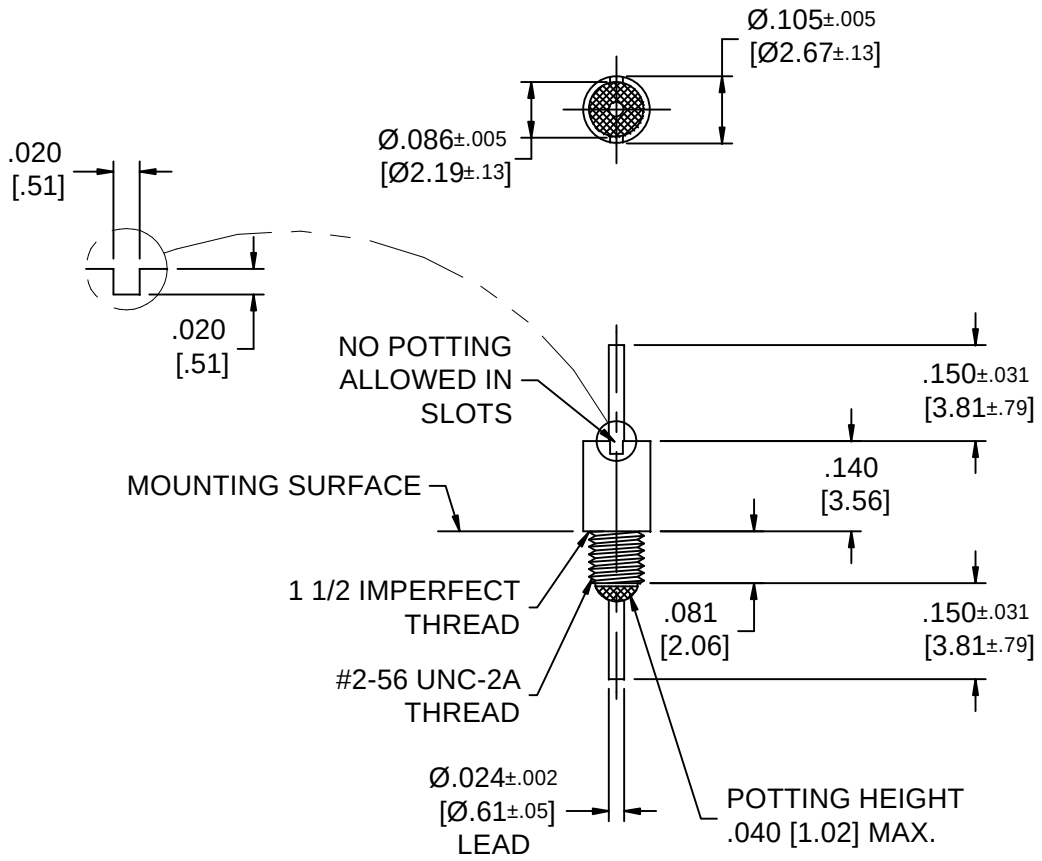

LEAD FINISH	GOLD
BUSHING FINISH	GOLD
CAPACITANCE	9000pF +100 / -0%
TEMP. RANGE	-55°C TO +125°C
CURRENT	5 AMPS
WORKING VOLTAGE	125°C 50 VDC
DC RESISTANCE	.005 Ohms MAX.

I.L. PER MIL-STD-220 @ 25°C (NO LOAD)

07 FREQ. MHz	I.L. (dB)
1	5
10	20
100	40
1 GHz	60
10 GHz	65

SCHEMATIC

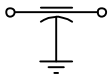

MARKING: NONE

PACKING:

"PACK IN BAGS 200 PCS. MAX.

54-874-018
SCI
DATE CODE
LOT NO.
QTY. / BAG

REV. NO.	CHANGE NOTICE
07	CN 56978-ENG
06	CN 43605-ENG
05	CN 205750
04	CN 204162
03	CN 191534
02	CN 190457
01	CN 186571
00	CN 184433

UNLESS OTHERWISE SPECIFIED DIMENSIONS ARE IN INCHES [MILLIMETERS]

DO NOT SCALE

THIRD ANGLE PROJECTION

TOLERANCES UNLESS OTHERWISE SPECIFIED
Dec. .x ±
Dec. .xx ±
Dec. .xxx ±.010 [.25]
Angles ± 0° 30"

CODE IDENT. NO. 0LSP2

SPECTRUM CONTROL INC.

FAIRVIEW PENNSYLVANIA

Dwn. Hassett
Date 12-16-10
Engr. Mast
Sheet 1 of 1

Description
FT FILTER
54-874-018

Quality Products From The Specialists In Electro—Magnetic Compatibility