| CASE FINISH | CURRENT (AMPS) | WORKING VOLTAGE | | | | MAXIMUM DC RESISTANCE (OHMS) | MAXIMUM VOLTAGE DROP | | CAPACITANCE (uF) | MIN. INSERTION LOSS PER MIL-STD-220, FULL LOAD, +25°C | | | | | | | | | | | | |
|---|---|---|---|---|---|---|---|---|---|---|---|---|---|---|---|---|---|---|---|---|---|---|
| | | -55°C TO +85°C | | -55°C TO +125°C | | | | | | | | | | | | | | | | | | |
| | | AC | DC | AC | DC | | DC | AC | | 14 KHz | 30 KHz | 50 KHz | 75 KHz | 100 KHz | 150 KHz | 300 KHz | 500 KHz | 1 MHz | 10 MHz | 100 MHz | 1 GHz | 10 GHz |
| SOLDER | 10 | ---- | --- | 125(400Hz) | 200 | 0.007 | 0.075 | 0.085 | 0.5/1.25 | -- | -- | -- | -- | -- | 16 | 18 | -- | 48 | 80 | 70 | 70 | -- |

PART MARKING:

M15733/27-0013
OLSP2 DATE CODE
200VDC 10A 125°C
125VAC 400Hz
51-321-314

PACKAGE MARKING:

STANDARD

MARKING NOTES:

N/A

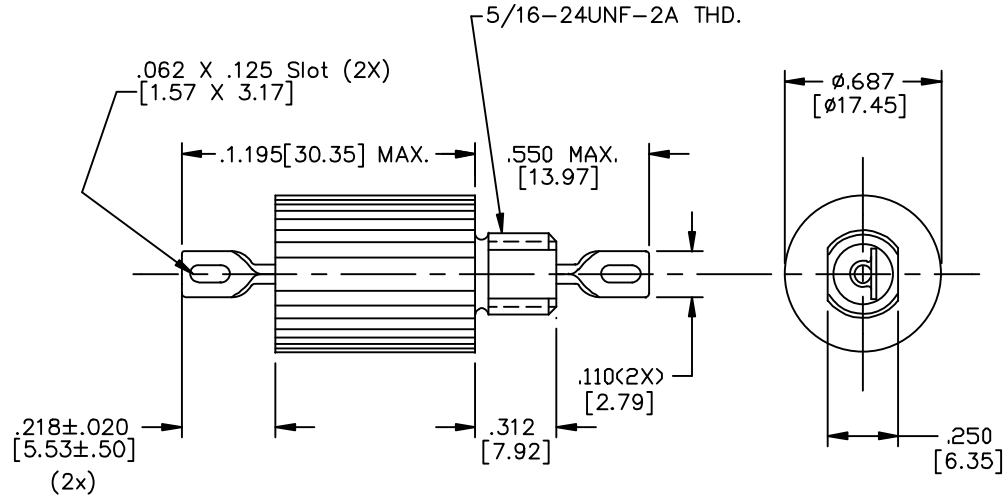


SCHEMATIC

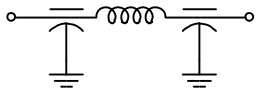

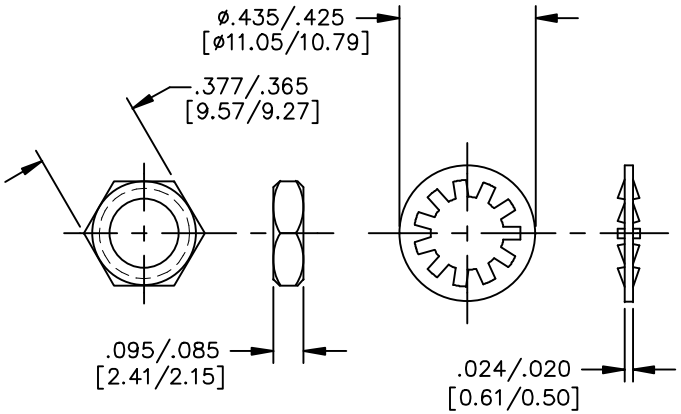


MTG. HARDWARE

37 THIS PART IS CODED **"NCA"**. SPECTRUM CONTROL, INC. DOES NOT HAVE CHANGE AUTHORITY. CUSTOMER APPROVAL REQUIRED BEFORE PRODUCT/PROCESS CHANGES CAN BE MADE.

NOTES:

1) MOUNTING TORQUE NOT TO EXCEED 7in-lbs.

| REV. NO. | CHANGE NOTICE |
|---|---|
| 36 | CN. 176804 REDRAWN |
| 37 | CN 58951-ENG |

UNLESS OTHERWISE SPECIFIED DIMENSIONS ARE IN INCHES [MILLIMETERS]

DO NOT SCALE

THIRD ANGLE PROJECTION

TOLERANCES UNLESS OTHERWISE SPECIFIED
Fractions ±
Dec. .xx±
Dec. .xxx± .010
Angles ±0° 30'

CODE IDENT. NO. OLSP2

SPECTRUM CONTROL INC.

FAIRVIEW PENNSYLVANIA

Dwn. KEVERLINE
Date 11-8-96
Ckd. McAlevy
Sheet 1 of 1

Description Low Pass EMI Filter

51-321-314

Quality Products From The Specialists In Electro-Magnetic Compatibility